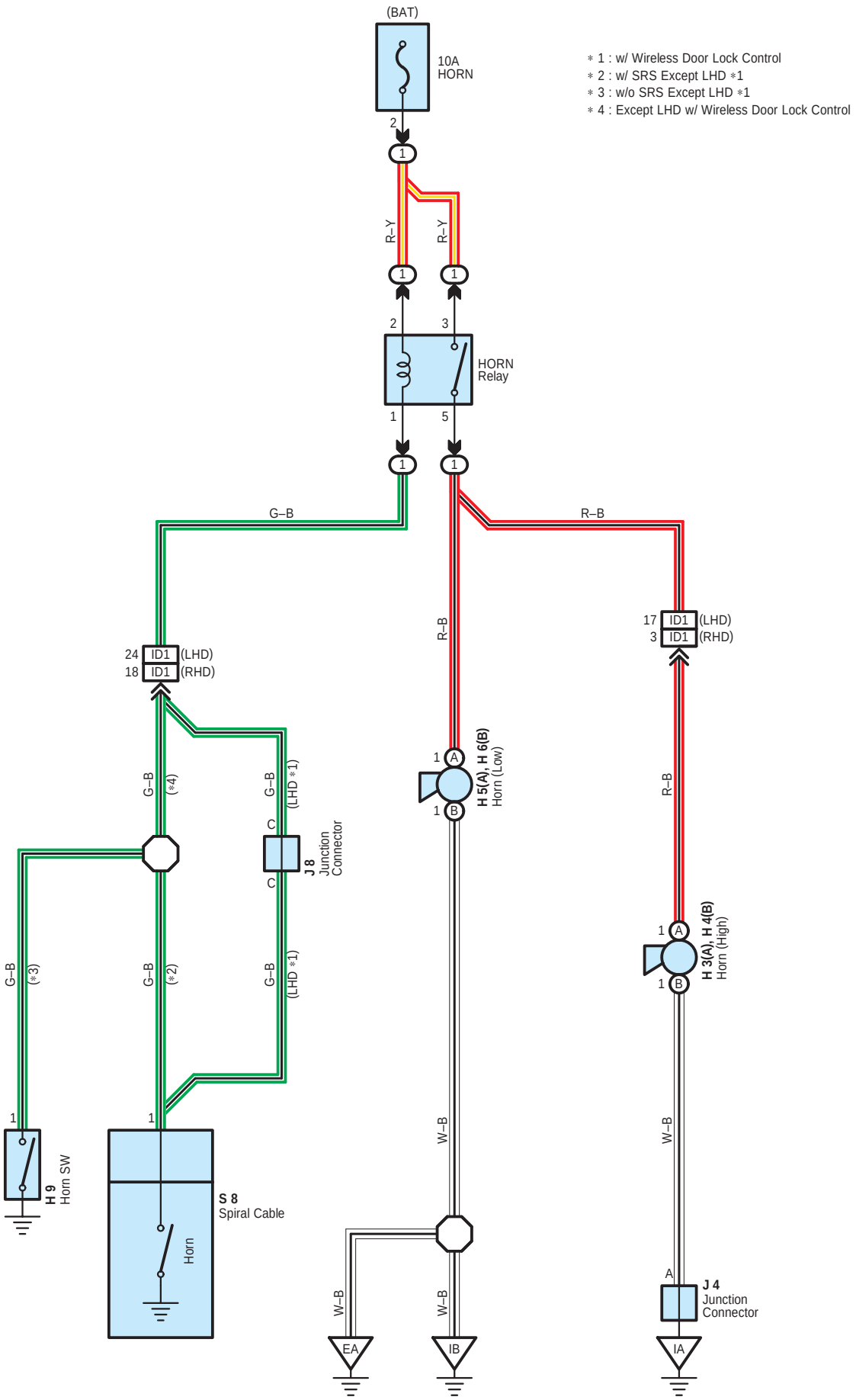
(BAT)
10A
HORN
∗ 1 : w/ Wireless Door Lock Control
∗ 2 : w/ SRS Except LHD ∗1
∗ 3 : w/o SRS Except LHD ∗1
∗ 4 : Except LHD w/ Wireless Door Lock Control
R–Y
R–Y
HORN
Relay
G–B
R–B
R–B
24 ID1 (LHD)
18 ID1 (RHD)
17 ID1 (LHD)
3 ID1 (RHD)
G–B (∗4)
G–B (LHD ∗1)
J 8
Junction
Connector
H 5(A), H 6(B)
Horn (Low)
R–B
H 3(A), H 4(B)
Horn (High)
G–B (∗3)
G–B (∗2)
G–B (LHD ∗1)
W–B
W–B
H 9
Horn SW
S 8
Spiral Cable
Horn
W–B
W–B
EA
IB
J 4
Junction
Connector
IA

: Parts Location

Code		See Page	Code		See Page	Code	See Page
H3	A	24 (*1)	H5	A	26 (*2)	H9	38 (*6)
		26 (*2)			32 (*3)	J4	29 (LHD)
		32 (*3)			34 (*4)		37 (*5)
		34 (*4)	H6	B	24 (*1)		39 (*6)
H4	B	24 (*1)			26 (*2)	J8	29 (LHD)
		26 (*2)			32 (*3)	S8	29 (LHD)
		32 (*3)			34 (*4)		37 (*5)
		34 (*4)	H9		28 (LHD)		
H5	A	24 (*1)			36 (*5)		

: Relay Blocks

Code	See Page	Relay Blocks (Relay Block Location)
1	22	Engine Room R/B (Engine Compartment Right)

: Connector Joining Wire Harness and Wire Harness

Code	See Page	Joining Wire Harness and Wire Harness (Connector Location)
ID1	44 (LHD)	Engine Room Main Wire and Instrument Panel Wire (Right Kick Panel)
	48 (*5)	Engine Room Main Wire and Instrument Panel Wire (Cowl Side Panel RH)
	49 (*6)	

: Ground Points

Code	See Page	Ground Points Location
EA	42 (*1)	Right Fender Apron
	43 (*2)	
	46 (*3)	
	47 (*4)	
IA	44 (LHD)	Right Kick Panel
	48 (*5)	Left Kick Panel
	49 (*6)	
IB	44 (LHD)	Cowl Side Panel RH
	48 (*5)	
	49 (*6)	

* 1 : LHD 3SZ–VE * 2 : LHD K3–VE * 3 : RHD 3SZ–VE * 4 : RHD K3–VE * 5 : RHD w/ Heater * 6 : RHD w/o Heater